Transfer or duplication of this document as well as the utilization or communication of its contents are prohibited unless explicit authorization is granted. Violations will be liable for compensation. All rights reserved for patent, utility model or designs registrations. 除非得到明确授权，否则禁止转让、复制、利用、交流本文件的内容。侵犯者将负赔偿责任。本公司保留对涉及发明、实用新型和外观专利的所有权利。

| 未注公差/General tolerances(mm) | | | | | | | | | | | | | | |
|---|---|---|---|---|---|---|---|---|---|---|---|---|---|---|
| 0 ~ 3 | >3 ~ 6 | >6 ~ 10 | >10 ~ 18 | >18 ~ 30 | >30 ~ 50 | >50 ~ 80 | >80 ~ 120 | >120 ~ 180 | >180 ~ 250 | >250 ~ 315 | >315 ~ 400 | >400 ~ 500 | >500 | 0.1/10 |
| ±0.12 | ±0.18 | ±0.22 | ±0.26 | ±0.31 | ±0.37 | ±0.57 | ±0.80 | ±0.93 | ±1.05 | ±1.15 | ±1.60 | ±2.20 | ±2.50 | ±2° |

(W/O COVER)

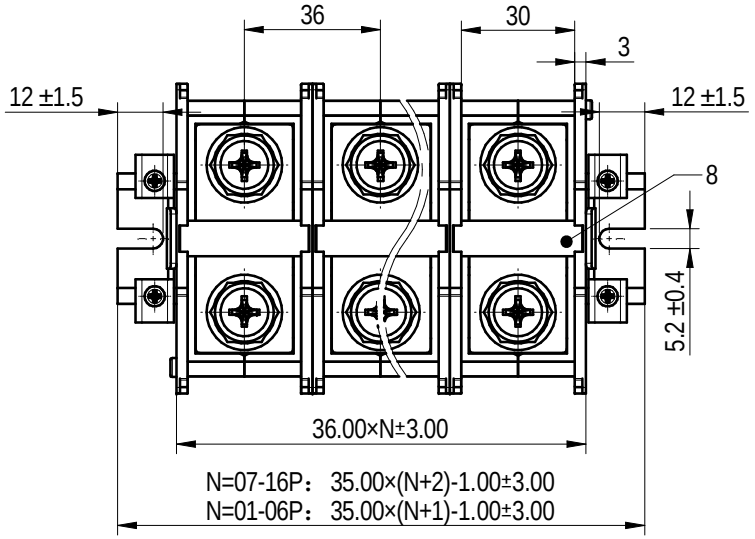


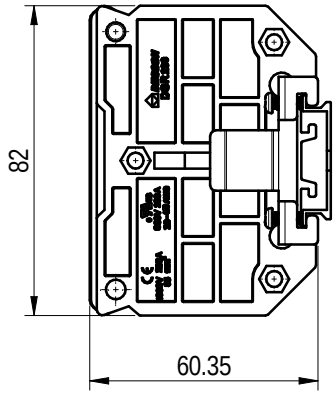


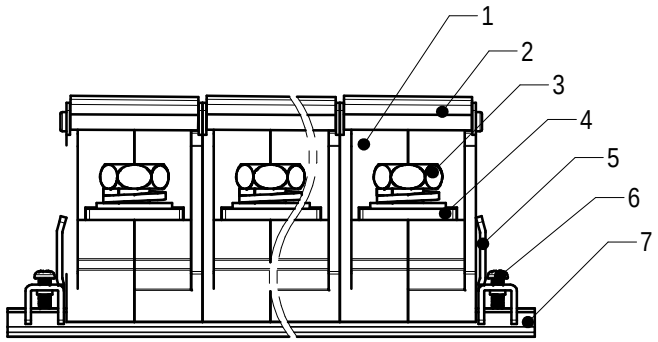


| ITEM | NAME OF PART | MATERIAL | NOTES |
|---|---|---|---|
| 8 | Tag | PVC | UL94V-0 |
| 7 | Tramroad | AL | / |
| 6 | Screw | Steel | Zn Plated |
| 5 | Fastener | SPCC | Zn Plated |
| 4 | Current carrier | Copper Alloy | Ni Plated |
| 3 | Screw | Steel | Zn Plated |
| 2 | Cover | PC | UL94V-2 |
| 1 | Housing | PC | UL94V-0 |

| 技术要求/Technical Requirements | | | | |
|---|---|---|---|---|
| UL 标准/UL Standard | | B | C | D |
| 1 | 额定 电压/电流/Rated Voltage(V)/Current(A) | 600/200 | 600/200 | / |
| 2 | 工频耐压/R.M.S withstand voltage(V/1min) | AC2200 | | |

| 其他要求/Other Requirements | | |
|---|---|---|
| 1 | 螺丝扭矩/Torque Tightening(N・m/Lb.in) | M10 , 9.04 / 80 |
| 2 | 线径范围(硬线和软线)/Wire Range(rigid and flexible)(AWG/mm²) | 4/0~20 |
| 3 | 间距/Pitch(mm)/线数范围/Poles | 36.0/N=01~16P |
| 4 | 使用温度范围/Operating temperature(℃) | -40~+125 |
| 5 | 符合RoHS环保要求/Conform to RoHS | Yes |

| REV | ECN | NO.OF CHGS. | DESCRIPTION | DATE |
|---|---|---|---|---|
| 03 | | | | 2026.11.20 |

DEGSON

| | | | | | |
|---|---|---|---|---|---|
| MATERIAL: | | | SURFACE: | | |
| MAT NO.: | | | MAT STATUS: 批量 | COLOR: | |
| APPD | 龚耀志 | 2026.11.20 | NAME | DGR200-XXP-1Y-10Z(H) | |
| CHKD | 朱伟明 | 2026.11.20 | | | |
| DRFT | 包新棉 | 2026.11.20 | DRAWING NO. | TYPE | DRAWING STATUS |
| A4 | | DIMS:mm | 200120821 | CUSTOMER DRAWING | 已发布 |

| SCALE | SHEET |
|---|---|
| 2:1 | 1/1 |